HX Series

Digital Temperature controller

- Installation Depth 63 ㎜
- Fast Sampling Cycle 60 ㎳
- Multi-Input · Multi-Output
- Communication (RS485, RS422)
- Heating Control / Cooling Control / Simultaneous Heating · Cooling Control
- Heater Break Alarm / Retransmission Output
- Setting Value (SV) Selection by Contact Input (DI)

Suffix code

Model		Code		Description	
HX	□ -	□	□	Multi-input and output digital temperature controller	
Dimension	2			48(W) X 96(H) ㎜	PID Auto-tuning
	3			96(W) X 48(H) ㎜	
	4			48(W) X 48(H) ㎜	
	7			72(W) X 72(H) ㎜	
	9			96(W) X 96(H) ㎜	
Control output		0		Normal (heating control)	
		1		Heating/cooling control (simultaneous control)	
HX2/3/9 option			0	None	
			1	RS485 communication + Heater break alarm (H.B.A)	
HX7 option			0	None	
			1	RS485 communication + DI 2 contacts (SV2, SV3)	
			2	RS485 communication + Heater break alarm (H.B.A)	
HX4 option			0	None	
			1	RS485 communication + DI 1 contact (SV2)	
			2	RS485 communication + Heater break alarm (H.B.A)	

Specification

Performance

Display accuracy	±0.5 % of FS ±1 Digit Thermocouple (K, J, E, T, R, B, S, L, U, W, PL2). ±1.0 % of FS ±1 Digit Thermocouple (N). ±0.5 % of FS ±1 Digit RTD (KPt100 Ω, Pt100 Ω), DC voltage.
External power supply	12 V DC 20 mA max (Cannot be used when using retransmission output)
Insulation resistance	20 MΩ min (500 V DC), (Primary terminal – Secondary terminal)
Dielectric strength	2,300 V AC 50/60 Hz, 1 min (Primary terminal – Secondary terminal)

Input

Input selection	Thermocouple	K, J, E, T, R, B, S, L, N, U, W, PL2
	Resistance temperature detector (RTD)	Pt100 Ω(IEC), KPt100 Ω(KS)
	DC voltage	1 – 5 V DC, –10 – 20 mV, 0 – 100 mV.
	DC current	4 – 20 mA (250 Ω External resistor attached)
Input sampling time		62.5 ms
Display resolution		Basically below decimal point of measurement range
Input impedance		Thermocouple and input DC voltage (mV): Minimum 1 MΩ or higher. Input DC voltage (V): Approximately 1 MΩ.
Allowable signal source resistance		Maximum 250 Ω (thermocouple), Maximum 2 KΩ (DC voltage)
Allowable wiring resistance		Maximum 10 Ω (RTD). The resistance of the three wires must be same.
Allowable input voltage		Within ±10 V thermocouple, RTD, DC voltage (mV)], within ±20 V [DC voltage (V)]
Scaling		0.0 % ~ 100.0 % of FS. (SL–L ~ SL–H)
Input Compensation		–100.0 % ~ 100.0 % of FS
Input disconnection detection		OFF, UP / DOWN scale selection (thermocouple), UP–scale (RTD)

Control

Control method		a) PID auto–tuning (target value or that goal auto tuning selection) • reverse operation (heating) / operation (cooling) random selection (parameter setting) b) heating / cooling PID control (auto–tuning function)
Set range		Refer to Range and input code.
Contact input (DI)		Select three kinds of pre–set temperature by the external contact.
Heating–side proportional band		0.1 ~ 999.9 %
Cooling–side proportional band		0.0 ~ 999.9 %
Integral time		OFF, 1 ~ 6,000 Seconds
Derivative time		OFF, 1 ~ 6,000 Seconds
Effectively prevent (A.R.W)		Auto, proportional 50.0 ~ 200.0 % ※ A.R.W : Anti Reset Wind–up
ON / OFF control		"Output Settings group" based on the kind of outputthe selection of parameters (output number: 0) ※ When general model uses the relay output, it can select ON / OFF control
PID selection		Select Zone PID ro Group PID.
Manual Reset		When integral time is off, it can select Manual rest.
output volume when Input line breaks		a) OUT1 : –5.0 ~ 105.0 (General type). 0.0 ~ 105.0 % (Heating/Cooling) b) OUT2 : 0.0 ~ 105.0 %
Hysteresis		0.0 ~ 100.0 % of FS. in case, selected on/off control (only General type)
Deadband (heated / cooled)		proportional band –100.0 ~ 50.0 %
Fuzzy function		Feature selection by parameters
Lamp function		Select temperature gradient of the output volume on the setting temperature.(the set temperature / minutes / hours)
Control output	Relay	NO : 5 A 250 V AC, 5 A 30 V DC (Resistive load) NC : 3 A 250 V AC, 1 A 30 V DC (Resistive load)
	SSR (Voltage pulse)	ON Voltage : 12 V DC min, OFF voltage : =0.1 V DC max, Load resistance 600 Ω min
	SCR (Current)	Range : 4 – 20 ㎃ (±5 %), Tolereance : ±0.2 ㎃ Load resistance 600 Ω max

Retransmission output

Signal (RET)	4 – 20 mA DC (load resistance maximum 600 Ω)
Accuracy	±0.5 % of FS (4 – 20 mA range)
Resolving power	Resolving power : Approximately 3,000
Kind	Select one of Indication value (PV), set value (SV), ouput volume (MV), external power supply (12 V dc, 20 mA max)
Scaling	Based on set range limits or scaling settings.

Communication

Communication method	EIA RS485 standard, asynchronous two-wire half-duplex
Communication speed	2400, 4800, 9600, 14400, 19600 bps
Protocol	· PC. LINK, · PC. LINK CHECK SUM, · MODBUS-ASCII, · MODBUS-RTU
Bit format	· Data bit : 7 bit(only PC LINK), 8-bit · Parity bit : None, Even, Odd · Stop bit : 1 bit, 2 bit
Address	1 to 99. The maximum connection capacity: 32 (Including host)

Alarm

Output points (relay)	• Maximum 2 points (HX2, HX3, HX4, HX9 : 1a 2 points) ※ Temperature alarm (AL1, AL2), heater break alarm (HBA), relay control output (OUT2) universal features.
Contact capacity	240 V AC 1A, 30 V DC 1A (Resistive load)
Hysteresis	Range 0.0 % ~ 100.0 %
Temperature alarm (AL1, AL2)	• Alarm type : refer to alarm type and code. • Absolute Range of alarm setting range : 0 ~ 100 % • Deviation alarm setting range : range of ±100 %
Heater break alarm (HBA)	• Maesure Current : 1 – 50 A AC (resolving power : 0.5 A ±5 % of FS ±1 Digit) • Heater burnout detection for C.T : Model CT-50N ※ ON / OFF control is only available on time proportional control. ※ Output ON / OFF time can not be detected in less than 0.2 seconds.

Specification

Model	HX2	HX3	HX4	HX7	HX9
Power supply voltage	100 – 240 V AC 50/60 Hz				
Voltage fluctuation	±10 % of power supply voltage				
Power consumption	6 W max, 10 VA max				
Ambient temperature	0 ~ 50 ℃ (Without condensation)				
Ambient humidity	35 ~ 85 % RH (Without condensation)				
Storage temperature	-25 ~ 65 %				
Vibration (resistance)	10 – 55 Hz, peak amplitude 0.75 ㎜ for 2 hrs each in 3 axis direction				
Shock (resistance)	300 ㎧, 3 times each in 3 axes direction				
Weight (Included the weight box)	212 g	310 g	162 g	236 g	286 g

Input code for input type and range

In Input group (GI n) input type(I nP) parameters, If you select "No. 1" code, K thermocouple range is set as −200 ~ 1,370 ℃.

Input signal	Code	Input type	Range (℃)	Accuracy	Note
Thermocouple (TC)	1	K *2	−200 ~ 1,370	±0.5 % of FS ±1 Digit	• FS is the measurable range from the maximum to the minimum for each range. • Digit is the minimum display value *1 0 ~ 400 ℃ range : ±10 % of FS ± 1 digit *2 below 0 ℃ : ±1.0 % of FS ± 1 digit *3 −150.0 ~ 150.0 ℃ range : ±1.0 % of FS ± 1 digit ※20 → kPt 100 Ω ※21 → Pt 100 Ω (IEC751)
	2	K *2	−199.9 ~ 999.9		
	3	J *2	−199.9 ~ 999.9		
	4	E *2	−199.9 ~ 999.9		
	5	T *2	−199.9 ~ 400.0		
	6	R *2	0 ~ 1700		
	7	B *1	0 ~ 1800		
	8	S	0 ~ 1700		
	9	L *2	−199.9 ~ 900.0		
	10	N	−200 ~ 1300	±1.0 % of FS ±1 Digit	
	11	U *2	−199.9 ~ 400.0	±0.5 % of FS ±1 Digit	
	12	W	0 ~ 2300		
	13	Platinel Ⅱ	0 ~ 1390		
Resistance temperature detector (RTD)	20*	KPt100 Ω *3	−199.9 ~ 500.0		
	21*	Pt100 Ω *3	−199.9 ~ 640.0		
	22	Pt100 Ω	−200 ~ 640		
DC voltage (VDC/㎷DC)	30	1 − 5 V DC	1 − 5 V DC		
	31	0 − 100 ㎷ DC	0 − 100 ㎷ DC		
DC current	30*	4 − 20 ㎃ DC	※ When current input is used, please connect a 250 Ω 0.1% resistor to the input terminal.		

Select type of control output(PID)

Output group (GoUt) and selection of outout kind (oUt) on general temperature
If you select "0", the relay output ON / OFF control action.
If you select "1", the SSR output ON / OFF control action.
If you select the "twice", 4 − 20 mA DC current output operation.
If you select the "three times", PID control relay output to operate.

(1) Regular type

Output selection (oUt)		OUT1 (heating side)		OUT2		Default
		Relay	SSR/SCR/RET	Relay	SSR/SCR/RET	
Regular type	0	Relay (ON/OFF)	−	AL2 (Alarm2 output)	RET (Retransmission output)	1
	1	−	SSR			
	2		SCR (4 − 20 mA)			
	3	Relay (PID)	−			

※ In the case of General model, RET(Transmit output) will not be able to select.

(2) Heating / Cooling

Type	Output selection	OUT1 (Heating side)		OUT2		Default
		Relay	SSR/SCR/RET	Relay	SSR/SCR/RET	
Heating/ Cooling	4		SSR	AL2 (Alarm2 output)	SSR	4
	5		SCR (4 – 20 mA)			
	6	Relay	RET (Retransmission output)			
	7		SSR		SCR (4 – 20 mA)	
	8		SCR (4 – 20 mA)			
	9	Relay	RET (Retransmission output)			
	10		SSR	Relay (Control output)	RET (Retransmission output)	
	11		SCR (4 – 20 mA)			
	12	Relay				

※ Alarm Output 1 (AL1) is basically built-in. (in case of relay output in cooling side, AL2 is not available.)

Alarm type and code

(Cautious) : Display lamp will be ON when output becomes OFF in inverted type.

Hysteresis

(△ : Set value,–▲ : minus alarm set value, ▲ : alarm set value)

Code number	Alarm type	Operation diagram
1	high absolute (proper)	
2	low absolute (proper)	
3	high deviation (proper)	
4	low deviation (proper)	
5	high deviation (Inverted)	
6	low deviation (Inverted)	
7	high/low deviation	
8	within high/low deviation	
9	high absolute (Inverted)	
10	low absolute (Inverted)	
11	high absolute (proper, hold function)	
12	low absolute (proper, hold function)	
13	high deviation (proper, hold function)	
14	low deviation (proper, hold function)	
15	high deviation (Inverted, hold function)	
16	low deviation (Inverted, hold function)	
17	high/low deviation (hold function)	
18	within high/low deviation (Hold function)	
19	high absolute (Inverted, hold function)	
20	low absolute (Inverted, hold function)	
21	heater break alarm 1 (HBA 1)	

Part name and function

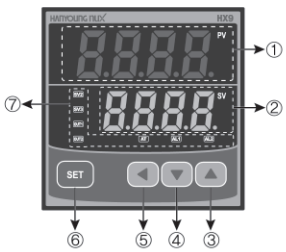

※ HX9 is chosen to explain

Number	Name		Description
①	Process value (PV)		Displays the process value in the operation mode.
②	Set value (SV)		Displays the set value in the operation mode
③	▲	Up key	Increases the set value or used to move between groups and to change an option in a parameter in setting mode
④	▼	Down key	Decreases the set value or used to move between groups and to change an option in a parameter in setting mode
⑤	◀	Shift key	Used to move the position of the digit
⑥	SET	Set key	Sets (confirm) the set value, displays the output amount, or set an option in a parameter in setting mode and moves between the parameters in a group. By pressing for 3 seconds, it enters the display setting mode (setting mode) or returns to the operation mode
⑦	SV2	Operation Indicator	Lights when SV2 is displayed
	SV3		Lights when SV3 is displayed
	OUT1		OUT1 indicator
	OUT2		OUT2 indicator
	AT		Auto-tuning indicator
	AL1		Alarm 1 operation indicator
	AL2		Alarm 2 operation indicator

Parameter composition

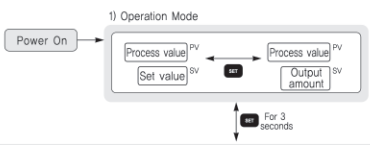

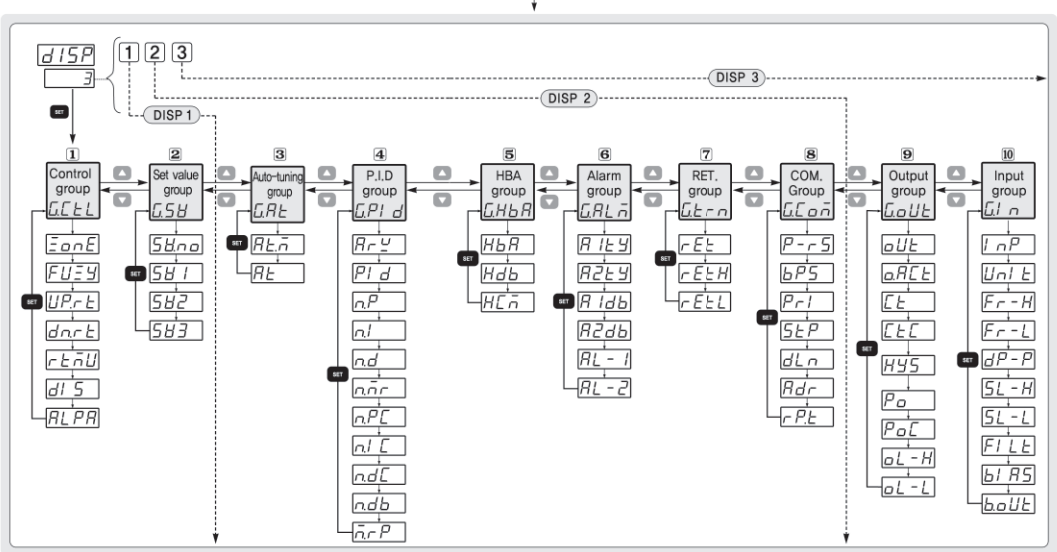

Operation method

■ When turn the power on after completing wiring

(1) After the firmware version of the temperature controller appears for a short period of time, the operation mode is running like the number ① that process value (current temperature) and the set value are displayed.

(2) In the number ①, if SET button is pressed for 3 seconds, it enters dISP display setting mode. It can be selected as DISP 1, DISP 2 and DISP 3 to limit displaying setting groups.

(3) In the operation mode, if SET button is pressed, the output amount is displayed like the picture ⑤ – ⑥ below.

● Switching between modes

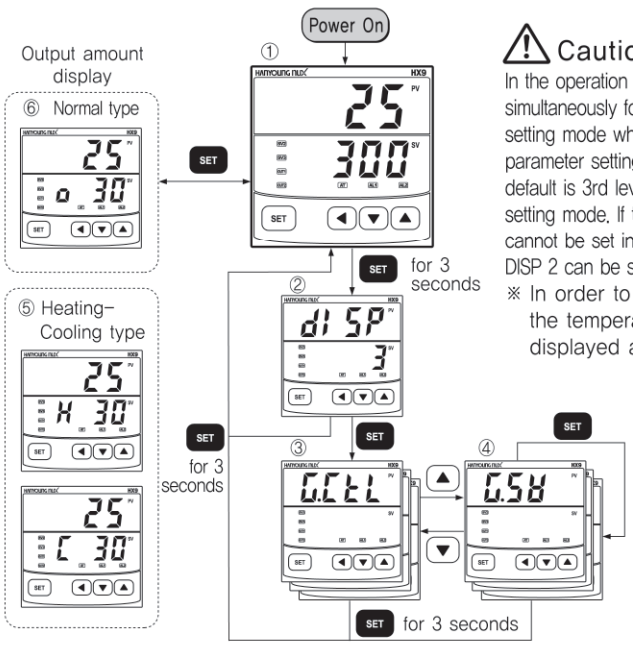

⚠ Caution

In the operation mode, if SET and ◀ button are pressed simultaneously for 3 seconds, it enters LEVL (LEVEL) setting mode which prevents an operator to change parameter setting as limiting access to the group. The default is 3rd level. The level setting mode limits the display setting mode. If the level setting mode is 2nd then DISP 3 cannot be set in the display setting mode. Only DISP 1 and DISP 2 can be set in the display setting mode.

※ In order to return the operation mode, turn off the temperature controller when tESt is displayed and then turn on it again.

1 Control group

Symbol	Parameter	Option	Available condition	Default
G.CtL	Control group	Options for control mode	–	–
ZonE	Zone setting	OFF / ON	Always on	OFF
FUZY	Fuzzy function setting	OFF / ON	PID control	OFF
UP.rt	Initial temperature increase setting	OFF / EUS (0 ~ 100 %)	Always on	OFF
dn.rt	Initial temperature decrease setting	OFF / EUS (0 ~ 100 %)	Always on	OFF
rtnU	Time for slope in ramp function	HOUR / MIN	Always on	HOUR
dI S	External contact input setting	OFF / ON	Always on	OFF
ALPA	2 degrees of freedom gain setting	1 ~ 100 %	Always on	85

2 Set value (SV) setting group

Symbol	Parameter	Option	Available condition	Default
G.SV	Set value setting group	Options for set values	–	–
SVno	Set value Number setting	1 ~ 3 (the chosen set value is displayed and controlled)	Always on	1
SV1	Set value 1 (SV1) setting	EU (0.0 ~ 100.0 %)		EU(0.0 %)
SV2	Set value 2 (SV2) setting	EU (0.0 ~ 100.0 %)		EU(0.0 %)
SV3	Set value 3 (SV3) setting	EU (0.0 ~ 100.0 %)		EU(0.0 %)

3 Auto-tuning (AT) group

Symbol	Parameter	Option	Available condition	Default
G.At	Auto-tuning group	Options for auto-tuning (AT) group	–	–
At.n	Auto-tuning type setting	Standard (STD) : Std / Low PV (LOW) : LoY	ABS	STD
At	Auto-tuning start setting	OFF / 1 ~ 3 / Auto (AUTO)	ABS	OFF

4 PID Group

Symbol	Parameter	Option	Available condition	Default
G.PId	PID group	Options for PID mode	–	–
ArY	ANTI RESET WIND-UP setting	Auto / 50.0 ~ 200.0 %	PID control	100 %
PId	PID group setting	0 / 1 ~ 3	Always on	0
n.P	n. Proportional band (P)	0.1 (H/C TYPE : 0.0) ~ 999.9 %	Selecting one of PID group	5.0 %
n.I	n. Integral time (I)	OFF / 1 ~ 6000 s	Always on	240 s
n.d	n. Derivative time (D)	OFF / 1 ~ 6000 s	Always on	60 s
n.mr	n. Manual reset	-5.0 ~ 105.0 %	Integral time: OFF	50.0 %
n.PC	n. Proportional band (P) for cooling	0.0 (ON/OFF control) / 0.1 ~ 999.9 %	heating · cooling	5.0 %
n.IC	n. Integral time (I) for cooling	OFF / 1 ~ 6000 s	heating · cooling	240 s
n.dC	n. Derivative time (D) for cooling	OFF / 1 ~ 6000 s	heating · cooling	60 s
n.db	n. hysteresis (dead band)	-100.0 ~ 50.0 %	heating · cooling	3.0 %
I.rP	n. Zone position setting	EU(0) 〈 1.RP 〈 2.RP 〈 EU (100.0 %)	PID group 1 or PID group 2	EU(100.0 %)

5 Heater Break Alarm (HBA) group

Symbol	Parameter	Option	Available condition	Default
G.HbA	Heater break alarm group	Options for HBA mode.	–	–
HbA	Current setting of HBA output	OFF / 1 ~ 50 A	HBA Option (Refer to "model name and code" table)	OFF
Hdb	Hysteresis setting of HBA output	EUS (0.0 ~ 100.0 %)		EUS(0.5 %)
HCn	Current measurement value of HBA output	Only indicates current measurement value (0 ~ 50 A)		

6 Alarm group

Symbol	Parameter	Option	Available condition	Default
G.ALn	Alarm group	Options for alarm mode	–	–
A1ty	Alarm 1 type setting	OFF / 1 ~ 22 Refer to "Alarm type and code"	Always on	1
A2ty*	Alarm 2 type setting			2
A1db	Hysteresis (dead band) of alarm 1	EUS(0.0 ~ 100.0 %)	Always on	EUS (0.5 %)
A2db*	Hysteresis (dead band) of alarm 2			
AL-1	Set value of alarm 1	PV alarm, deviation alarm : EU(–100.0 ~ 100.0 %)	Always on	EU(100.0 %)
AL-2*	Set value of alarm 2			EU(0.0 %)

7 Retransmission (RET) group

Symbol	Parameter	Option	Available condition	Default
G.trn	RET. Group	Options for RET. Group	–	–
rEt	Retransmission type or power for sensor	Process value(PV) / set value (SV) / output amount (MV) / power for sensor (SPS)	RET. option	PV
rEtH	High limit of retransmission	TC / RTD : FR-H ~ FR-L DC voltage : SL-H ~ SL-L But, RET.H 〉 RET.L	PV / SV	EU(100.0 %)
rEtL	Low limit of retransmission			EU(0.0 %)

8 Communication group

Symbol	Parameter	Option	Available condition	Default
G.Con	Communication group	Options for communication mode.	–	–
P-rS	RS 485 / RS 422 Protocol	PC.LINK (code : 0) PC.LINK SUM (code : 1) MODBUS-ASCII(code : 2) MODBUS-RTU (code : 3)	Comm. Option	0
bPS	Communication speed (B.P.S)	2400(code : 2), 4800(code : 3), 9600(code : 4), 14400(code : 5), 19600(code : 6)		4
Pri	Parity Bit	NONE(code : 0), EVEN(code : 1), ODD(code : 2)		1
StP	Stop Bit	1bit (code : 1), 2bit (code : 2)		1
dLn	Data length	7bit (code : 7), 8bit (code : 8) (code 8 is not available for PC LINK)		8
Adr	Address	1 ~ 99 but, max 31 units		1
rP.t	Response time	0 ~ 10. Response time = (processing time + response time) X 10 ms		0

9 Output group

⚠ Caution

Please make sure to choose "input code" in "input code setting" of the input group first and then select "output code" in "output type setting" and other options in other groups. If other options are selected first and then input code is changed to other input code, the options in the other groups will be changed.

Symbol	Parameter	Option	Available condition	Default
G.oUt	Output group	Options for output type and mode	–	–
oUt	Output type setting	Refer to "control output composition"	Always on	(0 / 3)
o.ACt	Output operation	REV: reverse, DIR: direct	Output code 0~3	REV
Ct	Cycle time	1 ~ 1000 s	relay / SSR	30 s
CtC	Cycle time for cooling	1 ~ 1000 s	Output code 4~12	30 s
HYS	Hysteresis for normal type	EUS (0.0 ~ 100.0 %)	ON/OFF control	EUS(0.5 %)
SET	Hysteresis for heating-cooling type	0.0 ~ 10.0 %	Heating-cooling	0.5 %
Po	Output amount of OUT1 when input break	Normal : -5.0 ~ 105.0 % Heating-cooling: 0.0 ~ 105.0 %	Always on	0.0 %
PoC	Output amount of OUT2 when input break	0.0 ~ 105.0 %	Heating-cooling	0.0 %
oL-H	High limit of output amount	Normal : OL-L + 1Digit~ 105.0 % Heating-cooling : 0.0 ~ 105.0 %	PID control	100.0 %
oL-L	Low limit of output amount	Normal : -0.5 % ~ OL-H-1Digit	PID control	0.0 %
		Heating-cooling : 0.0 ~ 105.0 %		100.0 %

10 Input group

Symbol	Parameter	Option	Available condition	Default
G.In	Input group	Options for input type and input mode	–	–
InP	Input code setting	Input signal and measurable range code	Always on	Code : 1
Unit	Temperature unit setting	℃ / ℉	TC or RTD	℃
Fr-H	High limit setting	Within range (refer to "input code for input type and range") but, FR-H 〉 FR-L	Always on	1370
Fr-L	Low limit setting		Always on	-200
SET dP-P	Decimal point position (voltage input)	Fixed for TC or RTD / DC voltage: 0 ~ 3 setting for decimal point position	Voltage input (mV,V)	1
SL-H	High limit of scale (voltage input)	-1999 ~ 9999 but, SL-H 〉 SL-L	Voltage input (mV,V)	100.0
SL-L	Low limit of scale (voltage input)	decimal point according to DP-P		0.0
FILt	Process value filter	OFF / 1 ~ 120 sec	Always on	OFF
bIAS	Process value bias (compensation)	EUS(-100.0 ~ 100.0 %)	Always on	EUS(0.0 %)
b.oUt	Operation after input break (burn-out)	OFF / UP / DOWN	Always on	UP

Dimension and panel cutout

HX2

● Dimension

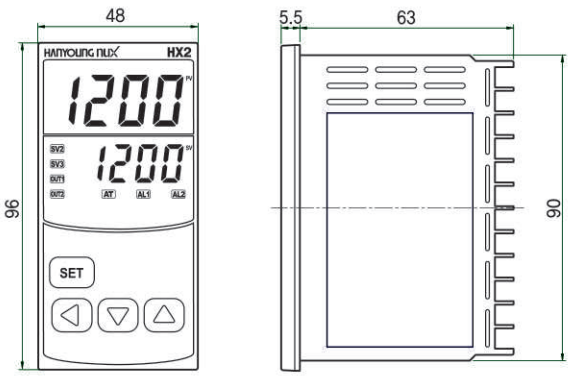

● Panel cutout

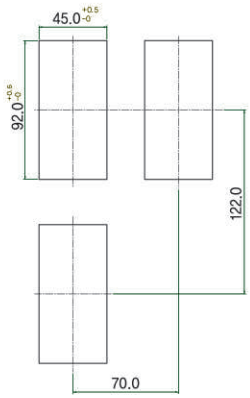

HX3

● Dimension

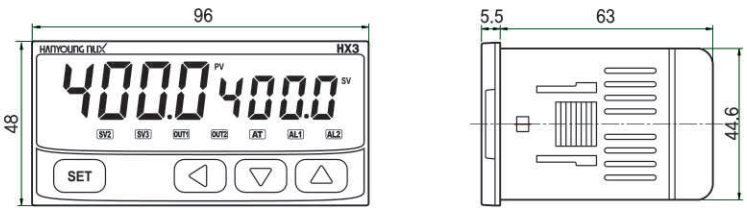

● Panel cutout

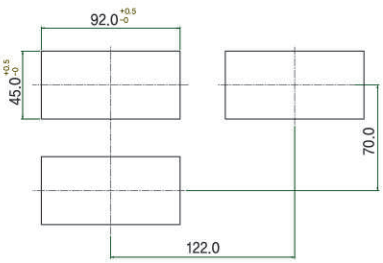

HX4

● Dimension

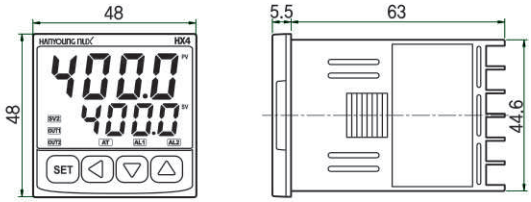

● Panel cutout

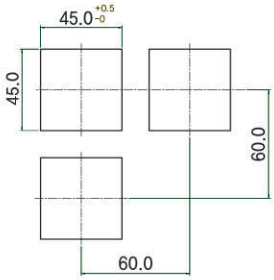

HX7

● Dimension

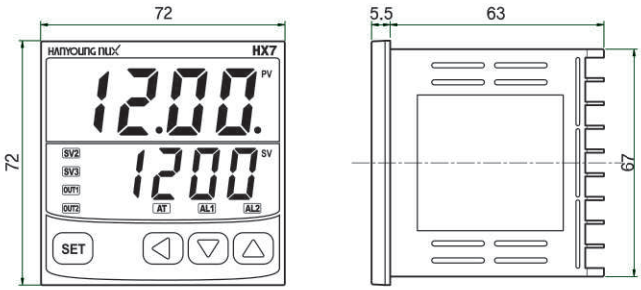

● Panel cutout

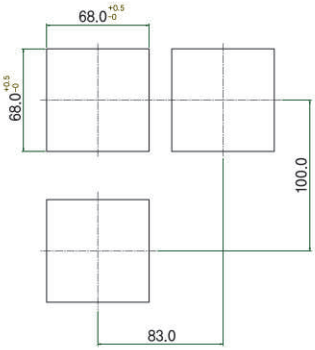

HX9

● Dimension

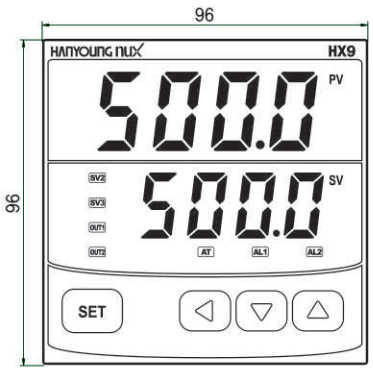

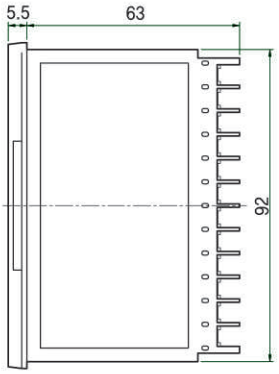

● Panel cutout

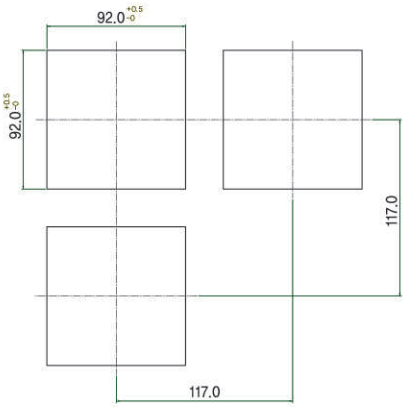

CT-50N

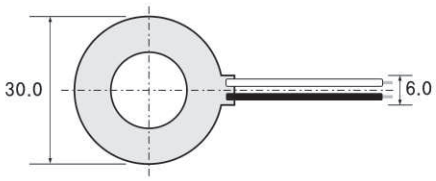

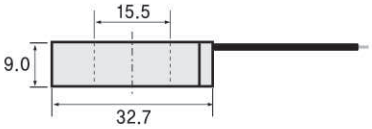

Bracket

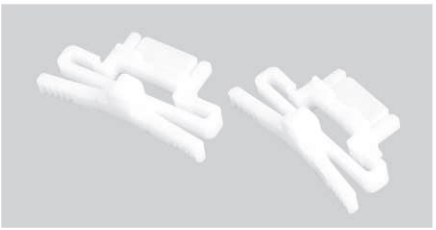

Connection diagram

(Unit : mm)

● HX2

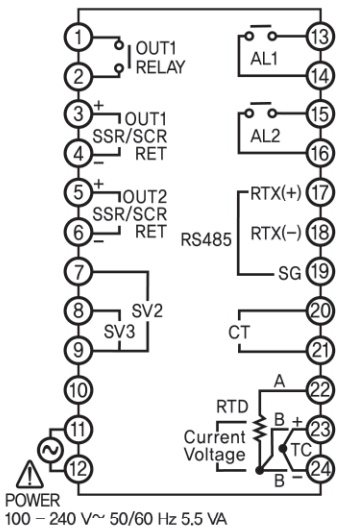

● HX7

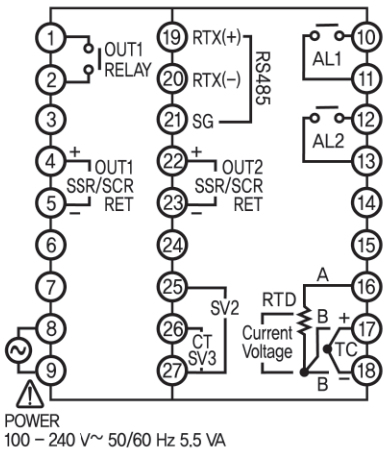

● HX3

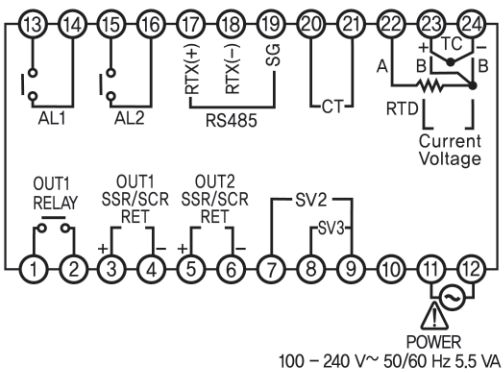

● HX9

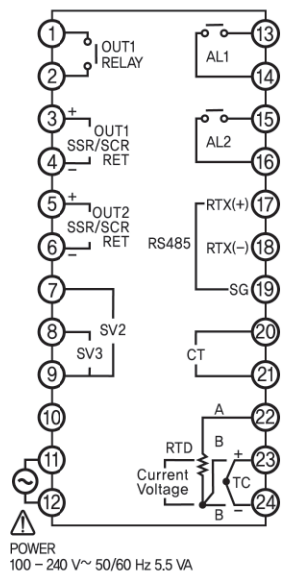

● HX4